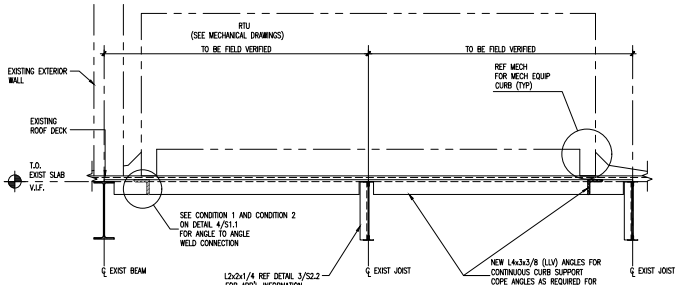

NOTE:

1. PROVIDE BLOCKING DIRECTLY BENEATH ROOF DECK AS REQ'D FOR CONTINUOUS ROOF CURB SUPPORT. REFERENCE MECH DRAWINGS FOR ROOF CURB.
2. TYPICAL ROOF OPENING FRAME AND SUPPORTS NOT SHOWN FOR CLARITY. SEE DETAIL THIS SHEET.
3. GENERAL LOCATIONS OF ANGLE FRAMING ARE INDICATED ON PLAN AND DETAILS. CONTRACTOR TO COORDINATE FINAL LOCATION W/ EQUIPMENT SUPPLIER.

1 SUPPORT DETAIL FOR ROOF TOP UNIT
3/4"=1'-0"

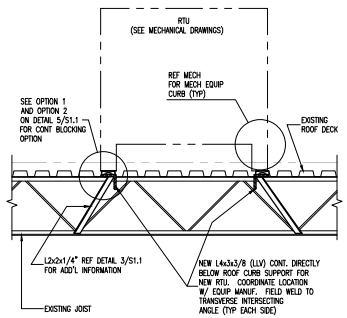

2 SUPPORT DETAIL FOR ROOF TOP UNIT
3/4"=1'-0"

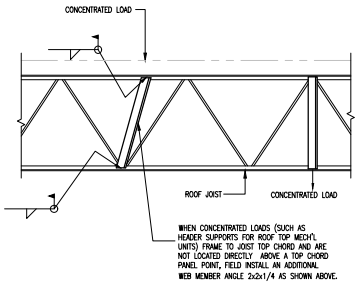

3 JOIST REINFORCEMENT DETAIL
3/4"=1'-0"

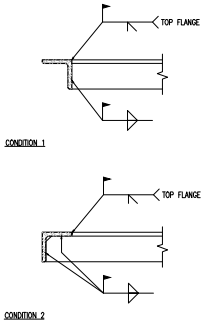

4 WELDING DETAILS
1 1/2"=1'-0"

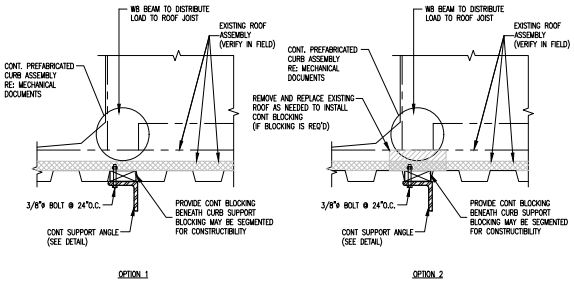

5 BLOCKING AT CURB
N.T.S.

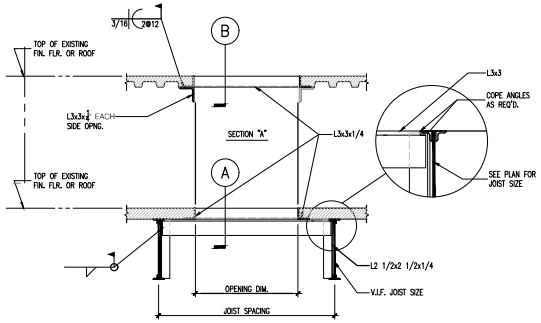

NOTE:

1. APPLIES TO ALL OPENINGS WITH A DIMENSION GREATER THAN 12".
2. REFER TO MECHANICAL OR ARCHITECTURAL DOCUMENTS FOR REQUIRED OPENING SIZES.

6 TYPICAL FRAMING @ ROOF OPENING WITH JOISTS
N.T.S.

STRUCTURAL NOTES

GENERAL

1. THE DESIGN GRAVITY LOADS ARE AS FOLLOWS:

A. WEIGHT OF MECHANICAL UNITS=AS REQUIRED AND PROVIDED
B. THE EXISTING STRUCTURE HAS BEEN CHECKED FOR THE PROPOSED RTU LOCATIONS AND THEIR RESPECTIVE WEIGHTS.

2. THE GENERAL CONTRACTOR IS RESPONSIBLE FOR COORDINATION OF ALL RESULTING REVISIONS TO THE STRUCTURAL SYSTEM AS A RESULT OF ACCEPTANCE OF CONTRACTOR PROPOSED ALTERNATIVES OR SUBSTITUTIONS.

3 . THE GENERAL CONTRACTOR IS RESPONSIBLE FOR FITTING NEW WORK WITH EXISTING CONSTRUCTION. INFORMATION ON EXISTING BUILDINGS SHOWN IN THESE DRAWINGS WAS BASED UPON THE INFORMATION SUPPLIED TO ROGERS MOORE ENGINEERS, LLC. THE ACTUAL AS-BUILT CONSTRUCTION MAY DIFFER FROM THAT REPRESENTED IN THE PROVIDED EXISTING DRAWINGS. CONTRACTOR SHALL VERIFY ALL INFORMATION. VARIATIONS FROM THE DIMENSIONS INDICATED ON THE EXISTING DOCUMENTS SHALL BE BROUGHT TO THE ATTENTION OF THE STRUCTURAL ENGINEER.

STRUCTURAL STEEL

1. NEW STRUCTURAL STEEL PLATES, ANGLES AND CHANNELS SHALL CONFORM TO ASTM A36.

2. WELDING SHALL CONFORM TO THE AMERICAN WELDING SOCIETY STANDARD D1.1. ELECTRODES FOR SHOP AND FIELD WELDS SHALL CONFORM TO AWS A5.1 OR AWS A5.5, CLASS E70XX, LOW HYDROGEN.

3. ALL FILLET WELDS SHALL BE MINIMUM AS REQUIRED BY AISC TABLE J2.4 BUT NOT LESS THAN 3/16". UNLESS OTHERWISE NOTED, WELDS SHALL BE WELDED ALL AROUND ON ALL ACCESSIBLE SIDES.

4. SPLICING OF STRUCTURAL STEEL MEMBERS WHERE NOT DETAILED ON THE CONTRACT DOCUMENTS IS PROHIBITED WITHOUT THE PRIOR APPROVAL OF THE STRUCTURAL ENGINEER AS TO LOCATION, TYPE OF SPLICE AND CONNECTION TO BE MADE.

5. PENETRATIONS SHALL NOT BE CUT IN STRUCTURAL STEEL MEMBERS UNLESS SO INDICATED IN THE DRAWINGS OR AS REVIEWED BY THE ENGINEER.

NOTES:

1) SEE PLAN AND DETAILS FOR LOCATIONS OF ANGLE BRACES.
2) ALL BRACING SHALL BE IN PLACE AND WELDED BEFORE DECK INSTALLATION.

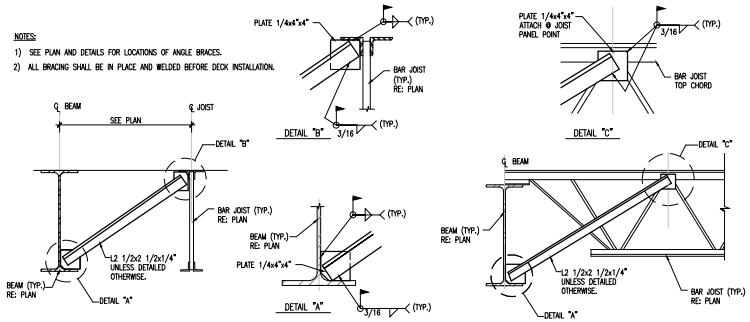

7 TYP. BEAM BOTTOM FLANGE BRACE DETAIL
N.T.S.

BRYAN McDANIEL, PE.
11000 CORPORATE CENTRE DR.
SUITE: 100
Houston, TX 77041
Line 1: (832)-767-2251
Line 2: (832)-767-2291
Fax: (713)-996-9499

JUSTSTORAGE - SELF STORAGE
37001 WARREN ROAD
WESTLAND, MI 48185

Date	Description
11/22/2024	PERMIT SET

Project Number	DPM-154
Drawn By	RLC
Checked By	BCM
Approved By	BCM

Drawing Title:
RTU SUPPORT DETAILS

STATE OF MICHIGAN
BRYAN C. MCDANIEL
ENGINEER
No. 6201061489
LICENSED PROFESSIONAL ENGINEER

Bryan C. McDaniel
11/22/2024

Drawing Name:
SD2-3